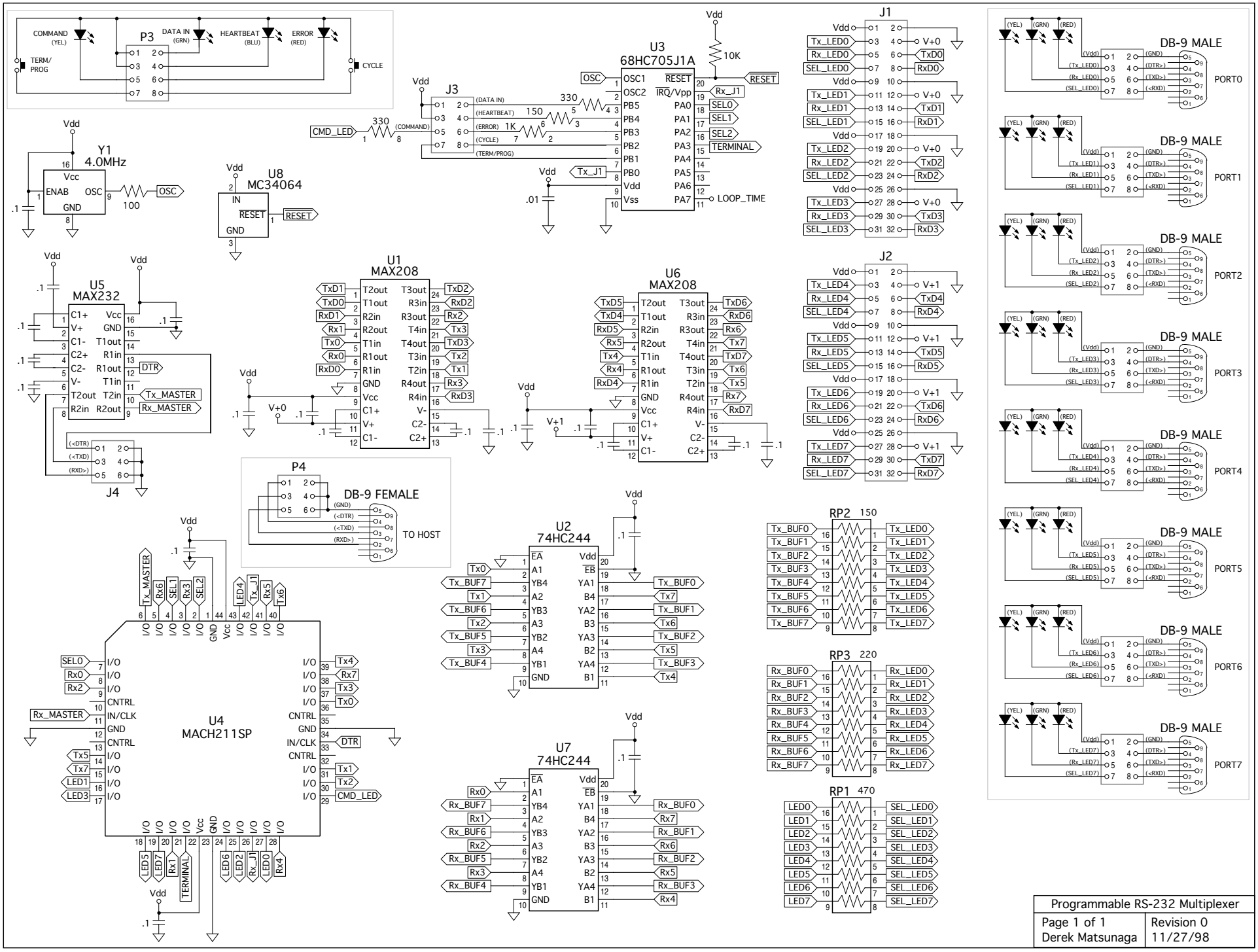

Programmable RS-232 Multiplexer	
Page 1 of 1 Derek Matsunaga	Revision 0 11/27/98